Introducing
FleX-J
FLEXIBLE
J CHANNEL
NEW! From
EXTRUDEX
Excellence in Custom Extrusion

# FleX-J

## FLEXIBLE J-CHANNEL

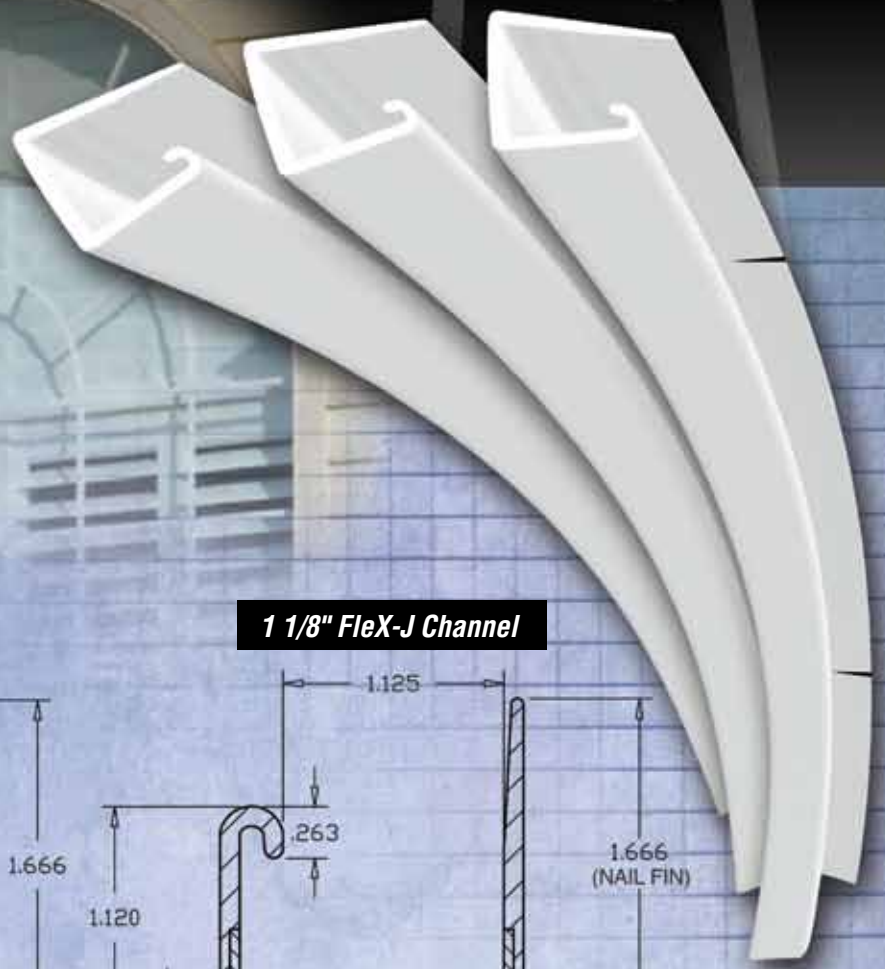

## ENGINEERED TO BE THE BEST!

***The EXTRUDEX FleX-J's unique design and material selection sets it apart from the competition.***

### UNIQUE FEATURES:

- A true 1" face – largest available!
- The combination of (97 and 80 Shore-A FPVC) makes the ***EXTRUDEX FleX-J*** the most stable Flexible J- Channel while providing the flexibility required required for easy installation.
- Enhanced design feature that extends the semi-rigid 97 durometer material partially up both the Face and Nail Fin, allowing the ***EXTRUDEX FleX-J*** to hold its shape around tight radii and thus reducing the possibility of deforming the 1" face during installation.
- Two available sizes: 3/4" and 1 1/8" provide proper fit with siding…limits distortion associated with "one-size fits all".
- Only Flexible J- Channel offered with "Curled-Over" Top on the Face side. A unique feature that provides the same professional finish found with rigid J-Channels.
- Longest nail flange (1.67") available…the nailing fin is tapered ensuring the ease of installation.
- Highest level of UV Inhibitor and Fungicide for any Flexible J-Channel in the industry.

**3/4" FleX-J Channel**

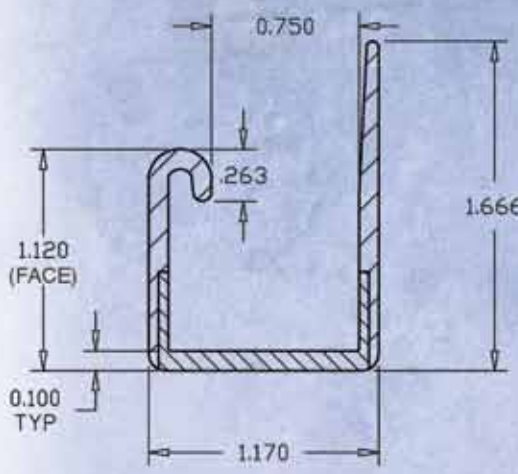


**1 1/8" FleX-J Channel**

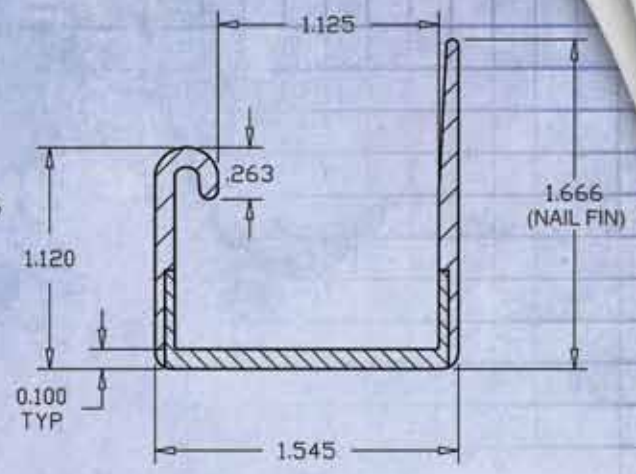


### Shipping Information

| | | |
|---|---|---|
| Pieces/Carton | 12 | 20 |
| Carton Size | 150x3.75hx5w | 150x3.75hx7.75w |
| Lineal Feet/Carton | 150 | 250 |
| Shipping Weight/ctn | 12pk=.75=38#/ 1.125=43# | 20pk= .75=58# / 1.125=73# |
| Delivery Time | 5 working days for stock items | |
| FOB: Painesville, OH 44077 | | |


**EXTRUDEX**

*Excellence in Custom Extrusion*

*310 Figgie Road, Painesville, Ohio 44077*
*(440) 352-7101 Fax: (440) 352-3146*
*Email: info@extrudex.net Web: www.extrudex.net*